transdutec, s.a.

células de carga – load cells – weighing electronics

AVTCC-4

Silo mount accessory

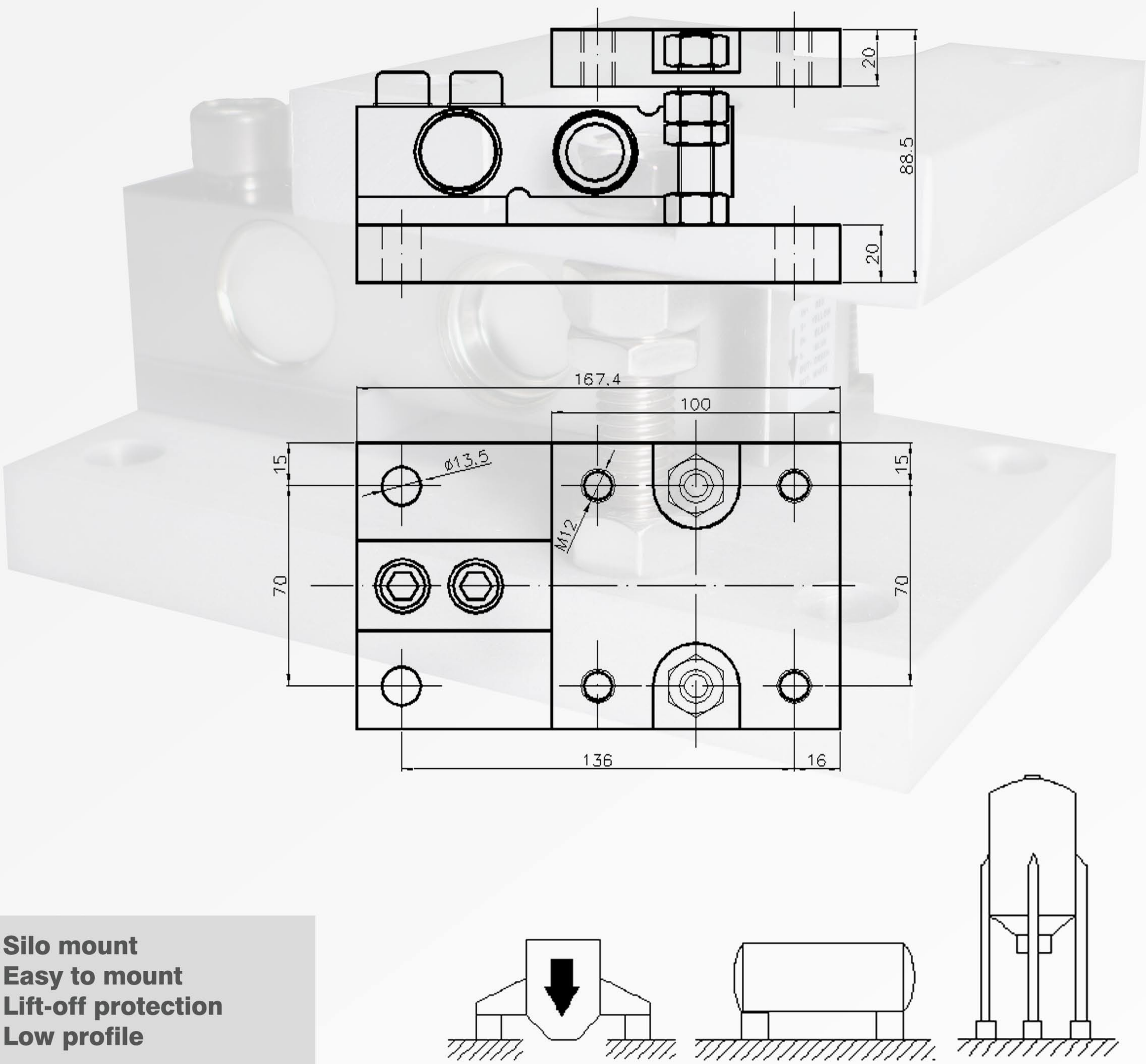

- Silo mount
- Easy to mount
- Lift-off protection
- Low profile

http://www.transdutec.com
transdutec@transdutec.com
T. +34 93 3810004 - F. +34 93 4620599
cl. Joan Miró, 11
08930 Sant Adrià de Besós - Barcelona - SPAIN